In the grey-background editorial inset on page 39 of the October issue it is said "... one group insists that the amplifier works by feed-forward, another school disagrees and says it uses feedback". I do not feel to belong to either of these insistent schools, and in chapter 14 of the Newnes-Butterworths book Radio, TV and Audio Technical Reference Book I say "It is also possible to regard this amplifier as employing the principle of 'feed-forward error correction', for the class-A amplifier contributes current directly to the load only when the dumpers are unable to do so fully – in other words, the class-A amplifier provides feed-forward correction of the dumper-stage error." So I was glad to find Mr McLoughlin defending the validity of alternative views. Of course such alternative views really only affect physical reasonings, and inventive steps in evolving modified circuits. Once a circuit exists, mathematical *analysis* of its performance does not essentially require any specific categorization of the circuit.

I was, however, very surprised to find Mr McLoughlin maintaining that John Vanderkooy and Stanley Lipshitz "again insist that feedforward alone is the only correct explanation", for a careful reading of their truly excellent paper (*AES Journal*, Jan./Feb. 1980) does not reveal to me any such insistence. Indeed it was with satisfaction that I found they included my name amongst those who had "correctly understood its operation". They choose to base their approach on the error feedforward concept – and I have no quarrel with this – but nowhere suggest that my alternative "instantaneously-variable negative feedback" approach is in any way wrong. I still prefer it.

Pervading Mr McLoughlin's thorough mathematical treatment there seems to be an implied belief that fully satisfactory stability, in the Nyquist sense, can be retained when the reversions to simple traditional overall feedback, mentioned in several places, are adopted. Unfortunately, in practice, stability considerations assume a dominant role, and are far from being just little engineering details that can be sorted out afterwards.

Messrs McLoughlin, Bennett and Halliday all point out, quite correctly, that though the Quad bridge scheme can theoretically produce zero distortion (ignoring any small distortion in the A amplifier itself), it is liable in practice, when component tolerances are allowed for, to produce considerably more distortion than would be obtained, stability considerations permitting, by removing the local feedback on the A amplifier and employing just simple overall feedback. But if this is tried in practice, what is the result? Oscillation at several MHz, even on a nice simple 8-ohm resistance load. Mr McLoughlin says "no traditional amplifier would contain such a component as C_2" – but what about the capacitor frequently connected between the collector and base of the second stage in many traditional amplifiers? The purpose is the same – to attenuate the loop gain at high frequencies in such a manner as to preserve stability.

The philosophy in the Quad 405 design is to make the A amplifier circuit behave as a clean and simple Blumlein integrator, with 120pF integrating capacitor, up to frequencies of many MHz. This has been done, very elegantly in my opinion, by providing all the mutual conductance for the integrator amplifier by means of a single transistor – the top right-hand one in Mr McLoughlin's Fig. 11. The other two transistors in the integrator amplifier are emitter followers, of extremely wide bandwidth, serving merely to raise the input impedance appropriately. This integrator circuit, fed from the high output impedance of the 405's input stage, Tr_2, provides such an enormous effective forward gain at medium and low audio frequencies that there is simply no need, at such frequencies, to bother about any clever bridge techniques. The impedance of L is negligible, and for all practical purposes the amplifier just has overall feedback directly from the output terminal – indeed it virtually becomes just what Mr McLoughlin and his friends would advocate. There is about 68dB of overall feedback at 1000Hz, for high signal levels, and more still at even lower frequencies, giving extremely low distortion. At 10kHz, because of the reduced forward gain, the distortion, with L short circuited, would be nominally ten times greater than at 1000Hz, though still pretty small. With L in action, however, this increase in distortion is largely prevented from occurring.

Now in any practical class-B audio power amplifier aiming at extremely low distortion, as anyone who has carried out practical design work will know, there are always distortion mechanisms additional to those considered in the idealized theory. By the very nature of it, a class-B power amplifier inevitably has some amps of highly non-sinusoidal current flowing in the two halves of the output stage, and a certain amount of unwanted coupling between the conductors carrying these currents and the input circuit conductors is unavoidable, especially at high audio frequencies. A mere thousandth of a microhenry in the wrong place can easily provide the dominant distortion-producing mechanism at 10kHz. Because of such considerations, it becomes pointless to try to carry the distortion-nulling technique involving L beyond a certain degree of precision, and tolerances no closer than ±5% have therefore been specified for the bridge components. Also, in view of the extremely high effective forward gain of the integrator amplifier, it would be quite meaningless to adopt any of the more elaborate formulae for bridge balance mentioned by Mr McLoughlin, and the design has therefore simply been based on $L=CR_1R_3$, with a slight correction, in no way critical, to allow for the effect, explained by him, of R_{12} in the base of the input transistor. To say, as he does, "R_{12} is causing unpredictable consequences and it must go" is really just nonsense, and seems to show a lack of awareness of the spendidly uncritical nature of the design.

Indeed, uncriticalness is the dominant virtue of the 405 amplifier and is one of the reasons for its relatively low price and great commercial success. The recipe, in a nutshell, consists of zero-biassed output transistors, a 47 ohm resistor to give some transfer of signal even at very low signal levels, an enormous amount of overall negative feedback at low and medium frequencies to give extremely low distortion, plus the application of feed-forward error correction, bridge technique, or instantaneously-variable negative feedback (take your pick!) to keep the distortion low at high frequencies too.

The fact that the feed-forward error correction technique is theoretically capable of yielding *zero* distortion seems to be what academically-inclined people have concentrated upon – it is an attractive idea – but of course, if relied on too heavily and not used in combination with a large amount of overall negative feedback, everything becomes rather critical, thus providing an opportunity for plenty of mathematics! I regard the use of an integrator in the forward path of the 405 as being truly a master stroke, rendering the design as uncritical as possible while also providing proper stabilization of the overall feedback loop. The slew-rate performance is such that the amplifier can properly cope with the most exacting digitally-recorded programme material.

The real engineering virtue of the Quad 405 scheme for audio power amplifiers is not that it enables lower distortion to be obtained than is possible by other means – for the best amplifiers not using it give quite low enough distortion – but rather that it enables a crude current-dumping, unbiassed output stage to be employed, having neither adjustments nor long-term drift and thermal problems, but without producing an amount of high-frequency distortion that many people would regard as too high. (Actually I would question whether a very critical listener would be able to detect the effect of shorting out the inductor L on any normal programme material, though the effect is just audible on sine-wave tone.)

When all aspects are taken into account, it seems to me that the elegant combination of unconventional circuit design techniques embodied in the Quad 405 represents a true advance in the field. The practical exploitation of these ideas has also been carried out in an exemplary manner, and I feel it was most appropriate that this excellent British product should have been selected for a Queen's Award to Industry. I think it is to be deplored that *Wireless World* should have lent its support to the misleading conclusions reached by Mr McLoughlin in his otherwise quite impressive articles.

Peter J. Baxandall
Malvern
Worcs

PS There is one specific mathematical point I would like to bring up. I am puzzled by the statement in the second article, at the top of the middle column on page 35, that "when currents and voltages depart from the sinusoidal, the symbols Z_2 and Z_4 have no meaning", for surely the whole basis of Heaviside's "operational impedance" concept is that these impedances are $Z_2=1/pC$ and $Z_4=pL$, where p means d/dt and is equal to jω in the particular case where sine waves are involved. Thus $V=(1/pC)\times I$ means $V=\int(I/C)dt$. For the inductor we have $V=pL\times I$, meaning that $V=d/dt(LI)$, or $V=LdI/dt$ for fixed L, which is a very well known result.

Mr McLoughlin says "the ratio V/I wanders through most values from zero to infinity throughout the cycle" – but so it does with sine waves, for with reactive elements V and I are in quadrature.

Certainly the distortion-nulling technique involving C and L is just as theoretically sound when considered in relation to transient waveforms as it is with sine waves.

HERETICS

Dr Scott Murray's amplification in the October letters of his discussion of the experiments by Aspect *et al.* is reasonable in so far as he confines himself to what was actually measured, but completely wrong about the interpretation of the measurements. In the first place it was not assumed that when the two cascade photons are emitted from the calcium atom they are polarised identically. In fact the angular momenta of the three states of the atom are known, those of

the highest and lowest energy states being zero. This knowledge allows one to deduce from quantum mechanics the polarization properties of the two photons. The calculations show that:

– If photons travelling parallel to the Z-axis are observed with an ideal detector of right-hand circularly polarised photons it will respond to just half the photons passing through it. Whenever it responds to a photon and the other photon is emitted in exactly the opposite direction it too will be found to be right-hand circularly polarized. A similar set of statements holds for left-hand circularly polarized photons from the calcium atom.

– If photons travelling parallel to the Z-axis are observed with an ideal detector of photons line-polarized parallel to the X-axis, it too will respond to just half of the photons passing through it. Whenever it responds to a photon, and the paired photon is emitted in exactly the opposite direction, it will be found to be line-polarized parallel to the X-axis, while if the second detector is set up to respond to photons line-polarized parallel to a direction normal to the Z-axis and making an angle θ with the X-axis, the coincidence rate between the two detectors will be reduced by the factor $\cos^2(\theta)$. A similar set of statements holds whatever direction normal to the Z-axis the first detector is set up to select.

So far as I know this combination of polarizations and polarization correlations cannot be realised in classical optics. One may note in passing Dr Murray's comment about 'how little it (i.e. the quantum theory) has to say even within the field it claims to cover'. The quantum theory predictions have been confirmed by experiments, in part of course by Dr Aspect's experiments.

Secondly the generalized Bell inequalities specifically do *not* involve quantum theory, but only the basic ideas of Special Relativity and the *rejection* of the notion of action-at-a-distance. They are clearly violated by the Aspect results, which give too high a relative coincidence rate between the two detectors for values of the angle θ between the settings of the two polarimeters in the neighbourhood of 22½ degrees.

Thirdly, the 'hidden variables' theories are not quantum theories, but seek to reproduce the experimental predictions of quantum theory by a deterministic theory, with random unobserved variables accounting for the fluctuating results associated with the uncertainty relationships. Though Dr Murray doesn't realise it, the people putting forward these theories are more or less on his side! The Bell inequalities still hold when one uses such theories, but do not require that one should use them. The article by Clauser and Shimony[1] provides an extensive account of these matters for anyone prepared to wade through some heavy mathematics.

C. F. Coleman
Grove, Nr Wantage
Oxfordshire

Reference

1. Clauser, J. F. and Shimony, A. Reports on Progress in Physics 41 (1978) 1881-1927.

The articles by Dr Scott Murray, together with the controversial inconsistencies outlined by I. McCausland regarding the theory of special relativity, have given rise to arguments typical of those misunderstandings, about any subject, that occur where one or more of the words used are not defined.

I consider a word as being defined only when it has one and only one stated meaning.

The following words which are fundamental to physics are not defined according to this criterion: mass, force, energy, velocity, acceleration, and time. Thus any theory using one or more of these words cannot be regarded as rigorous.

It was H. Dingle who pointed out that the word time has at least three meanings i.e. is not defined, and as a result it follows that the other words just listed, which are expressed, directly or indirectly in terms of time have themselves at least three meanings.

A recognition of the absence of definitions for these and other words, is the first and main step required of physicists if they are to extricate themselves from the morass of inconsistencies they have struggled through during the last 50 years. I can assume then that, if they were to take this step, new and comprehensible theories can be postulated which comply with all the known phenomena and more importantly add greatly to one's understanding of nature without the need for virtually incomprehensible mountains of mathematics.

David A. Chalmers B.Sc.
Finchley
London N3

I note with some relief that Dr Osinga (Letters, July) admits to the possibility of there having been oversights and omissions regarding the M-M experiment.

The reply to his problem concerns the conflict between the classical and relativistic viewpoints together with the indoctrination, given by modern teaching, which tends to force those things further apart.

In his book, mentioned by McCausland, Rudakov uses the phrase (re the M-M experiment):

"The result of the experiment indicated that there was something wrong with the assumptions."

That phrase epitomizes Dr Osinga's problem because, whatever any scientist might try to have you believe, the assumptions were never tested.

Light has a velocity which is constant with respect to space, or if you are of courage the aether, and thus with respect to the experiment it is inevitable that the velocity *of the wavefront* shall vary.

Taking those things into account together with Doppler we may be sure, if we are to as a last resort cling to reason, that the experiment constituted an unequivocal disproof of the relativistic tenet that length varies with relative velocity.

We must always remember that an experiment may never prove a theory but that it most surely can disprove it, as is the case with the much misinterpreted M-M experiment.

A. Jones
Alderney
C.I.

NANOCOMP/TTY INTERFACE

The problem of interfacing a teleprinter from low-voltage logic circuitry was tackled by a prototype design team some 24 years ago when transistor types like those used by P. C. Barton were not available (*Wireless World*, October 1983, p.75).

Some truly awful circuits were dreamed up and considered, including twin transistorized Cockroft-Walton ladders and an arrangement we called an oscillating totem-pole.

The latter circuit worked quite well but was

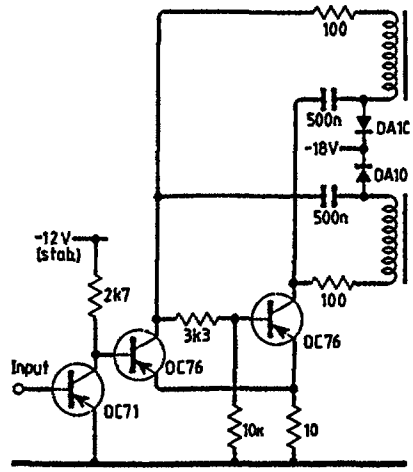

felt to be not the sort of thing that deserved the cost of a patent application; the firm therefore published it to prevent anybody else from doing so (*Electronic Engineering*, May 1961, p.278.)

It was then realised that the two coils of a type 7B teleprinter could be separated and driven in antiphase; also, with the bias spring disconnected, the selector lever could be held at "0" or "1" by a very small current and the 75 volts minimum specified by the t.t.y. manufacturers was required only at the moments of transition to get the coil currents changing fast enough to follow the code groups.

This led to the design of the circuit shown here in which the inductive surge generated as one coil is switched off is superimposed on the supply voltage applied to the other coil to get the current in that moving promptly.

This allowed such a dramatic reduction of the supply voltage required that the teleprinter could be driven as shown from the unstabilized rail in the power supply for the logic circuitry.

I have never seen this technique used since.

J. C. Rudge
Harlington
Middlesex

ETHERNET

In the News column of your October 1983 edition you include a paragraph entitled "Ethernet wins one race". In the article you imply that CSMA/CD has been adopted as the sole Media Access technique under IEEE 802. This is not the case. The IEEE forwarded three documents to the Peking meeting of ISO/TC 97/SC6: Logical Link Control (802.2), CSMA/CD (802.3) and Token Bus (802.4). The absence of the Token Ring document (802.5) from this list is only indicative of the late start this Media Access technique had. Indeed a letter was sent to the Peking meeting stating that it was intended to submit a Token Ring document at a later date.

Work is continuing in IEEE Project 802 on wideband systems which may well appear before ISO in the future. The Token Ring standard is by far the most 'active' document at present as the working group responsible for it (of which I am a member) strive to catch up with the other parts of Project 802. A Media Access Technique very similar to the IEEE 802 Token Ring has been submitted to ANSI X3 T9.5, the speed of operation of this ring is intended to be 100 Mbit/s, a speed at which not many designers would think of using Ethernet.

Ian Watson
British Telecom